LP BUILDING PRODUCTS TECHSHIELD® RADIANT BARRIER

LP® TechShield® Radiant Barrier Sheathing

Basic Uses

LP TechShield Sheathing can be used as a radiant barrier on roofs and gable ends to reduce solar gain. This product installs like conventional roof sheathing, requiring no additional labor.

Storage and Handling

Store LP TechShield panels in a clean, dry area. Do not store in direct contact with the ground. Protect from moisture prior to and during installation. Outside storage, if necessary, requires panels to be covered with plastic sheets or tarpaulins with the sides loosely covered to provide adequate air ventilation.

Handle LP TechShield panels as you would other APA rated LP sheathing products. Be careful not to drop on corners or crush panel edges. Keep panels well supported and neatly stacked to prevent warping. Use caution to avoid damage to the radiant barrier foil surface.

Gable Installation

Installing LP TechShield sheathing in the gable ends will help contribute to the reduction in solar gain and the overall energy efficient design of the attic space. As with the installation of LP TechShield sheathing on roofs, it is important that it is installed with the foil side facing into the attic.

For a copy of the warranty or for installation and technical support visit: www.lpcorp.com/techshield
Phone: 888.820.0325
Email: customer.support@lpcorp.com

Roof Sheathing Installation

- Place the skid-resistant side up with the APA trademark stamp facing down and wear skid-resistant shoes when installing the roof sheathing.
- Install with the long dimension or strength axis of the panel across supports and with the panel continuous over two or more spans.
- Provide 1/8" minimum space at panel ends and edges. Use a spacer tool (i.e. 10d box nail) to assure accurate and consistent spacing.
- Panel end joints shall occur over framing. Stagger end joints in each succeeding row.
- Provide additional panel stiffness by installing panel edge clips mid-span on all un-supported edges.
- Nail 6" o.c. along supported panel ends and edges and 12" o.c. at intermediate supports. Fasten panels 3/8" from panel edges. Use 8d common nails for panels up to 1" thickness. For panels over 1" use 8d ring-shank or 10d common nails. Other code-approved fasteners may be used.
- Cover roof sheathing as soon as possible with roofing felt or shingle underlayment for protection against excessive moisture prior to roofing. If any edge swelling occurs prior to roof underlayment installation, all raised joints should be sanded flat.
- Allow sheathing to adjust to humidity and moisture conditions before shingle installation.
- Remove wrinkles and flatten surface of shingle underlayment before installing shingles. High performance shingle underlayment is recommended for better results.
- Heavier weight and/or textured shingles are recommended to better mask imperfections in roofing assembly.

NOTE: Check with your local building department before deciding on an installation method.

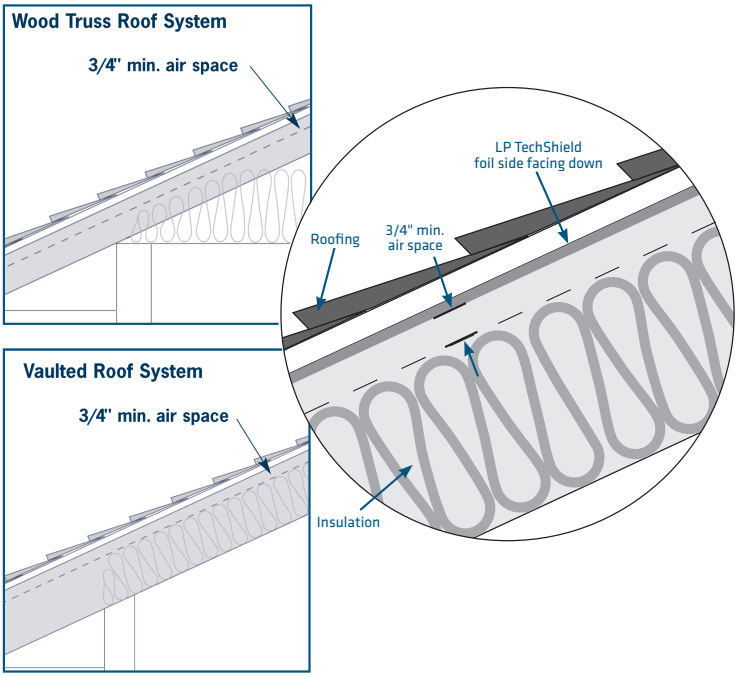

Recommended uniform roof live loads for APA-rated sheathing[c] LP TechShield with long dimension perpendicular to supports[e]

APA-RATED SHEATHING[c]		MAXIMUM SPAN (IN.)		ALLOWABLE LIVE LOADS (PSF)[d] Spacing of supports center-to-center (in.)						
Panel Span Rating	Performance Category[f]	With Edge Support [a]	Without Edge Support	12	16	20	24	32	40	48
24/0	3/8	24	20[b]	190	100	60	30			
24/16	7/16	24	24	190	100	65	40			
32/16	15/32, 1/2	32	28	325	180	120	70	30		
40/20	19/32, 5/8	40	32		305	205	130	60	30	
48/24	23/32, 3/4	48	36			280	175	95	45	35

(a) Panel edge clips (one midway between each support, except two equally spaced between supports 48 inches on center), lumber blocking or other.
(b) 24 inches for 15/32-inch and 1/2-inch panels.
(c) Includes APA-RATED SHEATHING/CEILING DECK.
(d) 10 psf dead load assumed.
(e) Applies to panels 24 inches or wider applied over two or more spans.
(f) Performance category replaces the nominal panel thickness

© 2010 Louisiana-Pacific Corporation. All rights reserved. LP and TechShield are registered trademarks of Louisiana-Pacific Corporation. Printed in U.S.A. NOTE: Louisiana-Pacific Corporation periodically updates and revises its product information. To verify this version is current, call 800-648-6893. 12/18/10

Cal. Prop 65 Warning: Use of this product may result in exposure to wood dust, known to the State of California to cause cancer.